INTEGRATOR AND DIFFERENTIATOR USING OP-AMP

INTEGRATOR

- **An integrator is an op-amp circuit that performs** mathematical integration, producing an output proportional to the input's amplitude and duration.
- Its layout is similar to an inverting amplifier, but the feedback resistor is replaced by a capacitor, making the circuit frequency-dependent.
- When input voltage is applied, the initially uncharged capacitor allows maximum current to flow.
- As the capacitor charges (based on the RC time constant), its impedance increases, reducing the charging current.
- This process creates a linearly increasing ramp output voltage that continues until the capacitor is fully charged.

In short: the op-amp integrator uses a capacitor in the feedback path to convert a constant input into a steadily rising ramp output, with the slope determined by the input and RC time constant.

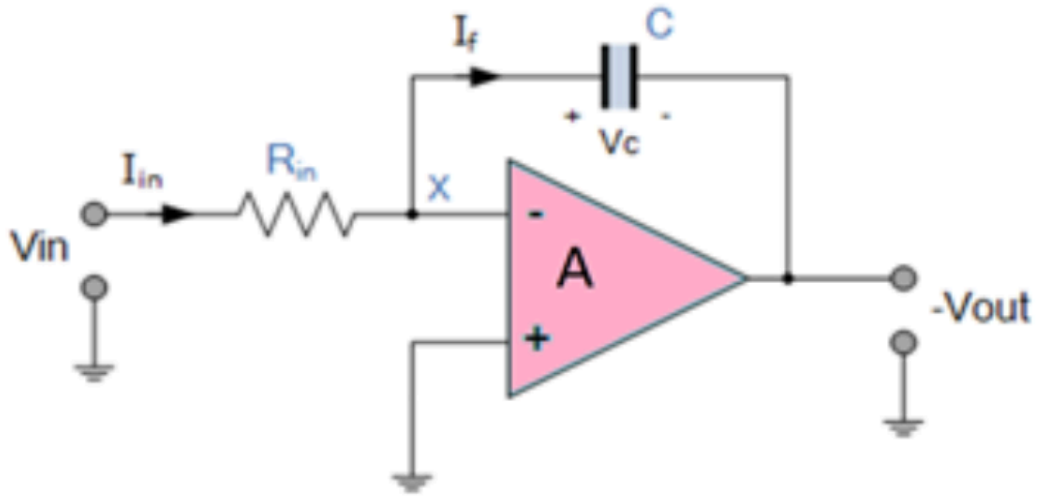

SET 1 (Amplitude = 1 V, Frequency = 1000 Hz)

- **Step 1 (Square wave setup):**
  - Channel 1 → Volt/div = 1 V, Amplitude = 1 V, Time/div = 0.1 ms/div.
  - Frequency = 1 kHz → Period = 1 ms (1 cycle in 1 ms).
- **Step 2 (Oscilloscope):**
  - Channel 2 → Volt/div = 1 V, Amplitude = 1 V.
  - Output shows integrated waveform.
- **Step 3 (Dual function):**
  - Channel 2 controls both signals.
  - At 1 kHz, 0.1 ms/div → 1 cycle in 1 ms.
  - Change frequency to 2000 Hz → Period = 0.5 ms.
    - At 0.1 ms/div → 2 cycles visible.
    - At 0.2 ms/div → 4 cycles visible.

- Channel 1 → Volt/div = 2 V (each major division = 2 V, minor = 0.5 V).
- Time/div = 0.1 ms (major division = 0.1 ms, minor = 0.02 ms).

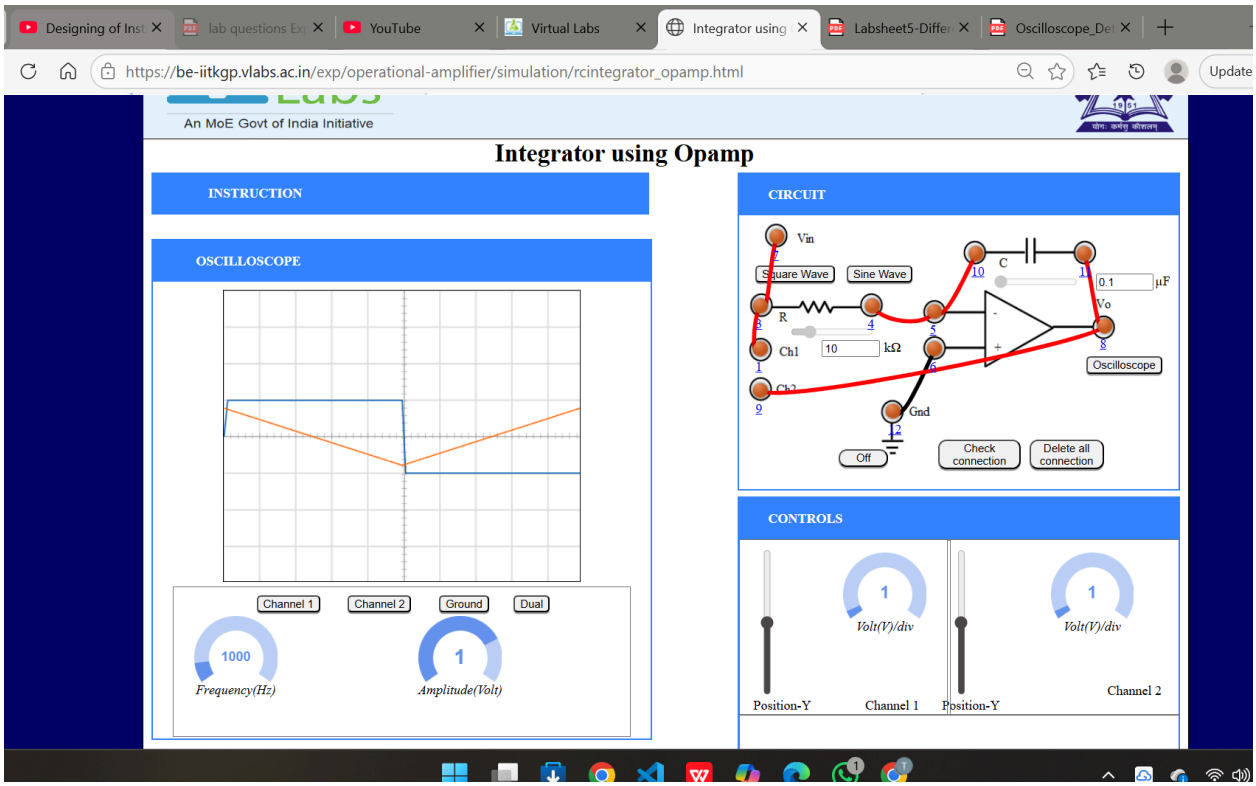

SET 2 (Amplitude = 1 V, Frequency = 1000 Hz)

- **Step 1 (Channel 1):**
  - Volt/div = 2 V (each major division = 2 V).
- **Step 2 (Channel 2):**
  - Volt/div = 2 V, Amplitude = 1 V.
  - Output signal displayed accordingly.

🔹 Other Oscilloscope Control Values

- **Case 1:** Amplitude = 1 V (2 Vpp), Frequency = 2000 Hz, Time/div = 0.2 ms/div, Channel 1 & 2 → Volt/div = 2 V. Dual mode shows both signals.
- **Case 2:** Amplitude = 2 V (4 Vpp), Frequency = 2000 Hz, Time/div = 0.2 ms/div, Channel 1 & 2 → Volt/div = 2 V. Dual mode shows both signals.

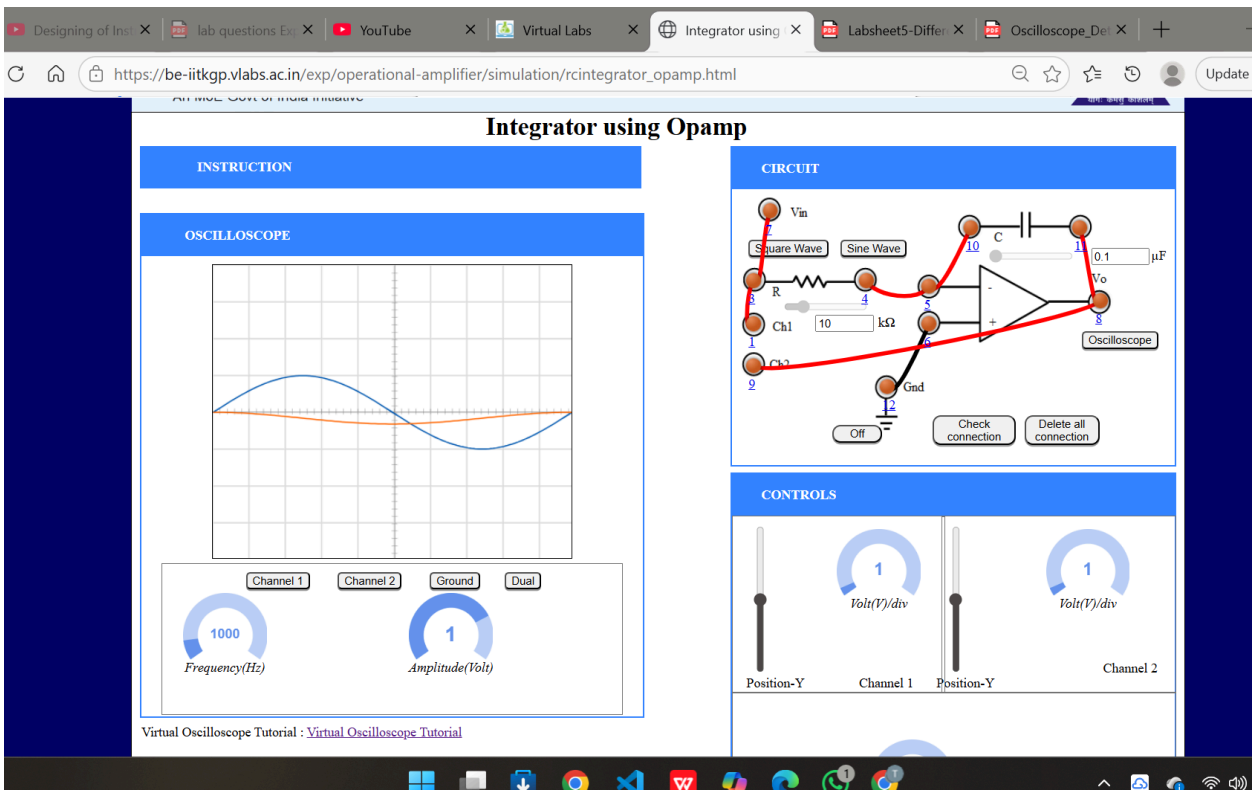

We adjusted amplitude, frequency, and volt/div settings on both channels to observe how the input square wave and its integrated output appear on the oscilloscope. Changing frequency and time/div alters how many cycles fit within the screen, while volt/div scales the voltage per division for clear visualization.

DIFFERENTIATOR

A differentiator is an op-amp circuit where the input passes through a capacitor to the inverting terminal, and a resistor provides negative feedback.

- *It's essentially the inverse of the integrator: the capacitor and resistor positions are swapped.*
- *The circuit performs mathematical differentiation, so the output is the first derivative of the input signal, inverted (180° out of phase) and scaled by the factor Rf · C.*
- *The input capacitor blocks DC, allowing only AC signals.*
- *At low frequencies, the capacitor's reactance is high → low gain.*
- *At high frequencies, reactance is low → high gain, but the circuit can become unstable.*

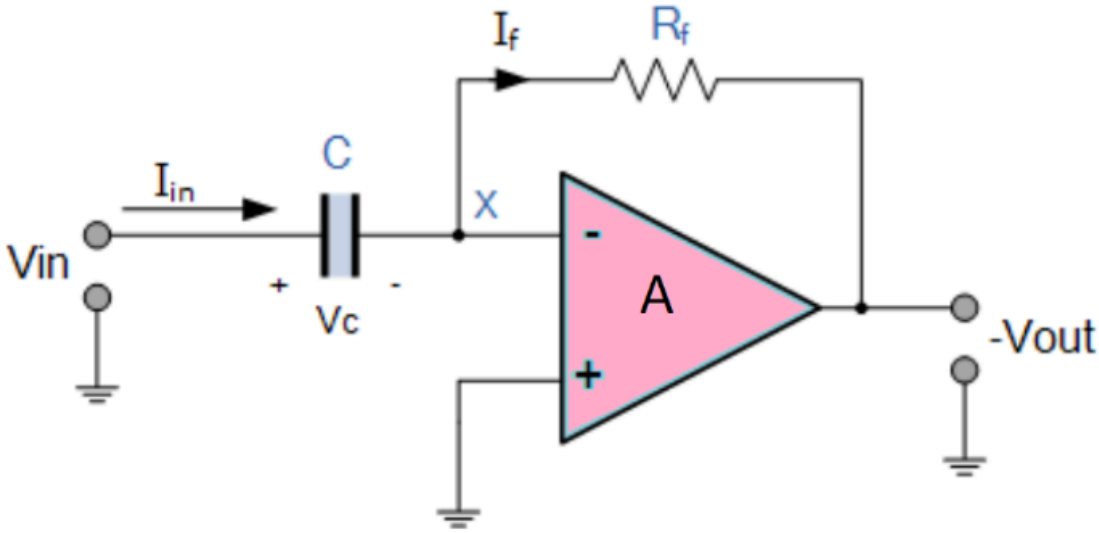

Steps and Observations

- Step 1 (Sine wave setup):
  - Channel 1 → Volt/div = 1 V, Amplitude = 1 V.
  - Time/div = 0.1 ms/div.
  - Frequency = 2 kHz → Period = 0.5 ms.
  - So in 1 ms, the sine wave completes 2 cycles.
- Step 2 (Oscilloscope):
  - Channel 2 → Volt/div = 1 V, Amplitude = 1 V.
  - Output shows the differentiated waveform (sine input → cosine-like output).
  - Time/div remains 0.1 ms/div.
- Step 3 (Dual function):
  - Channel 2 controls both signals.
  - Volt/div = 1 V.
  - Both input (sine) and output (differentiated) signals are displayed together.
  - At 2 kHz with 0.1 ms/div, the scope shows two cycles per millisecond.

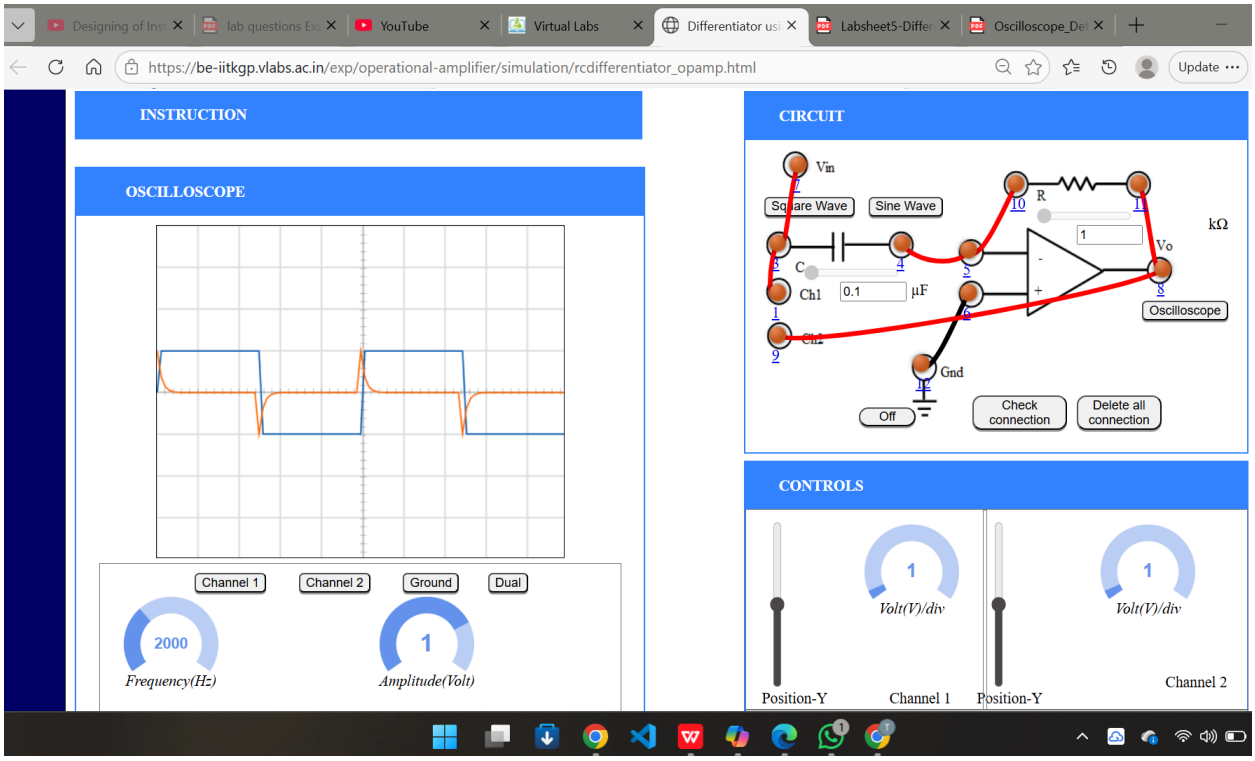
Designing of Inst
lab questions Ex
YouTube
Virtual Labs
Differentiator usi
Labsheet5-Differ
Oscilloscope_Det
https://be-iitkgp.vlabs.ac.in/exp/operational-amplifier/simulation/rcdifferentiator_opamp.html
Update
INSTRUCTION
OSCILLOSCOPE
Channel 1
Channel 2
Ground
Dual
2000
Frequency(Hz)
1
Amplitude(Volt)
CIRCUIT
Vin
Square Wave
Sine Wave
R
1
kΩ
Vo
C
Ch1
0.1
μF
Ch2
Gnd
Oscilloscope
Off
Check connection
Delete all connection
CONTROLS
1
Volt(V)/div
Position-Y
Channel 1
1
Volt(V)/div
Position-Y
Channel 2

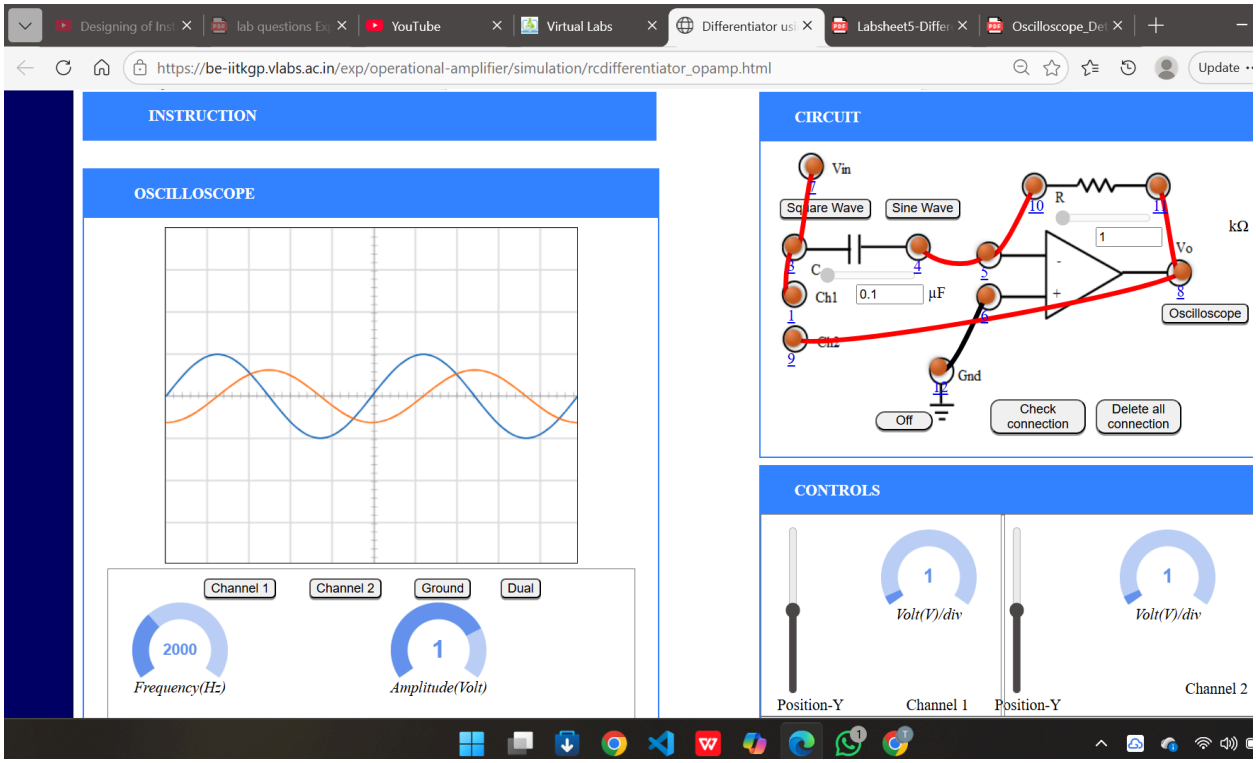
Designing of Inst
lab questions Ex
YouTube
Virtual Labs
Differentiator usi
Labsheet5-Differ
Oscilloscope_Det
https://be-iitkgp.vlabs.ac.in/exp/operational-amplifier/simulation/rcdifferentiator_opamp.html
Update
INSTRUCTION
OSCILLOSCOPE
Channel 1
Channel 2
Ground
Dual
2000
Frequency(Hz)
1
Amplitude(Volt)
CIRCUIT
Vin
Square Wave
Sine Wave
R
1
kΩ
Vo
C
Ch1
0.1
μF
Ch2
Gnd
Oscilloscope
Off
Check connection
Delete all connection
CONTROLS
1
Volt(V)/div
Position-Y
Channel 1
1
Volt(V)/div
Position-Y
Channel 2

Integrator vs Differentiator (Op-Amp Experiments)

Aspect	Integrator (Square Input)	Differentiator (Sine Input)
Input Signal	Square wave, 1 V amplitude (2 Vpp), f = 1–2 kHz	Sine wave, 1 V amplitude (2 Vpp), f = 2 kHz
Circuit Behavior	Performs **integration** → output ramps (triangle-like)	Performs **differentiation** → output shifts to cosine-like
Channel 1 (Input)	Volt/div = 1–2 V, Time/div = 0.1–0.2 ms/div	Volt/div = 1 V, Time/div = 0.1 ms/div

Channel 2 (Output)	Volt/div = 1–2 V, shows integrated ramp waveform	Volt/div = 1 V, shows differentiated waveform
Frequency Effect	At 1 kHz → 1 cycle in 1 ms; at 2 kHz → 2–4 cycles visible	At 2 kHz → 2 cycles per ms
Dual Mode	Displays both square input and ramp output together	Displays both sine input and differentiated output together
Key Observation	Output voltage ramps up/down linearly with input pulses	Output waveform leads input (derivative of sine = cosine)

Conclusion:

- The **Integrator** converts a square wave into a ramp (triangle-like) output.
- The **Differentiator** converts a sine wave into a cosine-like output.
- Oscilloscope settings (volt/div, time/div) control how clearly cycles and amplitudes are displayed.